BIOSCIENCES BIOTECHNOLOGY RESEARCH ASIA, August 2014. Vol. **11**(2), 1005-1011

A Comparison between the Effects of Solar and Sun (Traditional) Drying Methods on the Quality and the Quantity of Lemon in Jahrom City

Jafari Hamed* and Khadem Seyed Mohammad Reza

Department of Mechanician Agriculture, Eghlid Branch, Islamic Azad University, Eghlid, Iran.

doi: http://dx.doi.org/10.13005/bbra/1375

(Received: 02 March 2014; accepted: 04 April 2014)

In the food industry, there is an increasing tendency to develop economic ways to prepare food with high nutritional values and sensory qualities. One of the most widely used methods for preserving fruits and vegetables is drying. Citrus are among the most important tropical and subtropical fruits of the world which are highly putrescible and due to the fact that they are not available in all seasons, the main purpose of the present study is to study and compare traditional and solar drying methods of the product. After identifying one of the lemon groves in Jahrom, 80 lemon fruits perfectly uniform in the color and perfectly healthy in the lack of fungal infection were selected. In the solar drying method, 5 packs and 10 fruits in each pack and in the traditional drying method, 3 packs and 10 fruits in each pack were used. After the study of the treatment, fruit shrinkage rate, fruit moisture loss and fruit color index were measured. The results show that in both methods of drying, water absorption decreases with increasing temperature. In solar method, drying time is 17-45 percent less than that of the traditional method. In the solar technique, the fruit color is brighter than that of the traditional method. The results showed that the solar drying method is better than the traditional method. But on the other hand, the use of solar dryers because of the unavailability of equipment is not cost-effective and needs more detailed studies but in terms of the product quality is cost-effective.

Key words: drying, solar, traditional, lemon, Jahrom.

Citrus are among the most important tropical and subtropical fruits of the world and belong to the Rutaceae family and the Auratiodea subfamily, which includes 150 genera and nearly 2,000 species[1]. Lemon with the scientific name (Citrus aurntifolia, often given as C. limon), is the fruit of lime trees and one of the citrus fruits. Lemon is one of the commercial cultivars of citrus in our country[2]. Although, the flesh and the peels are used mainly in cooking, lemons are cultivated mostly because of their juice[3]. The product has many applications in food, pharmaceutical, perfumery and cosmetics industries. There are also many uses in traditional medicine[4]. For example, they are used to treat stomach pains and coughing[5]. The lemon has anti-bacterial (Gram-positive and Gram-negative bacteria) effect as well[6].

Most fruits like many other agricultural products due to the high moisture content and water activity are putrescible and should be consumed or kept in appropriate conditions as soon as they are harvested. Since the fresh market consumption per unit of time has a limited absorption capacity, they should be processed in a way to prevent their putrescencty and increase their shelf life[7,8]. One of the oldest techniques used by human as well as one of the most important preserving processes that has a phenomenal impact on the quality of the products is drying. The purpose of drying food is to minimize the storage and packaging requirements and reduce the cost of transportation[7,8].

* To whom all correspondence should be addressed.
Tel.: +989175611969;
E-mail : hamed.jafari29@yahoo.com

Drying is the process of moisture loss through heat and mass transfer simultaneously. Heat transfer from the surrounding air to the food substance causes to reduce surface water vapor pressure and evaporate the surface moisture. Due to the process, water vapor pressure gradient creates in the food substance and provides the driving force to remove the water from the food substance[9]. The traditional drying method involves quantitative loss, growth of microorganisms and putrescencty, attack of insects, birds and rodents, sudden rainfall or adverse weather conditions and etc. that result in a reduction in the quantity and quality of the product. In many rural areas of developing countries, the purchase of an industrial dryer is not economically effective for farmers and small farmers rarely use these facilities[10]. The controlled use of solar energy will be awesome. In our country, due to the availability of the eternal solar energy that is extremely available in the harvest of most crops, and more decentralized agriculture and rural areas and also lack of the cost-effectiveness of industries establishment in these areas, the use of solar dryers, appropriate in terms of price, utilization and flexibility for different products, can increase the quality and quantity of dried products[10]. Pangavan et al. designed a solar dryer with natural air flow, and used it for drying grapes. Their results showed that drying rate with this method is significantly more than that of open sun drying or shade drying[11].

Zare *et al*. designing an active compilation solar dryer, and using it for drying husks, showed that the mass flow rate of air in the dryer and product discharge interval have a significant effect on the moisture content of the husk output[12].

Sasilick *et al.* comparing the solar tunnel dryer with traditional drying method concluded that fruits dried by tunnel dryers had better and brighter color than those by traditional method. It should be noted that the study dryer has been a direct solar dryer and the product has been exposed to direct sunlight[13].

Since citrus fruits are among the majority of agricultural products which are exported abroad; And since drying fruits can help improve the economy and the fruit exports, and thus, the quality and shelf life of fruits is of great importance, so finding the right solution for drying fruits is considered essential, and it would be a great help to the departments of agriculture and also the economy, and therefore, the main objective of the present study is the same.

METHODS

The present study has been conducted completely randomly. That is, after identifying one of the lemon groves in Jahrom which had a standard uniformity of soil, slope, age and variety of trees, density and distance of trees, the food supply, irrigation, pests, diseases and weeds control during the trial will be conducted. Then in the harvesting season, 80 lemon fruits, quite similar in weight, size and shape and uniform in color and quite healthy in terms of the lack of fungal infection were selected.

In the solar drying method, 5 packs will be used and 10 pieces of fruit will be placed in each pack and the measurements will be carried out. In manual drying method, 3 packs will be used and 10 pieces of fruit will be placed in each pack. It should be noted that the number of repeats in treatments is ten times.

Construction of solar dryer

In the present study, solar dryer will be made by Polar Inc in Isfahan. The main parts of the dryer include collector, drying chamber, rotating fan, fan and collector base, a rectangular frame made of aluminum with a thickness of 8 cm a length of 200 cm, and a width of 92 cm that the upper surface is covered with a glass plate with a thickness of 4 mm. the lower surface is coated with a galvanized sheet. To prevent heat loss from the lower surface of the collector, a fiberglass insulating layer of 2 cm will be placed on the galvanized sheet. There is an aluminum plate with channels for air navigation on the insulating layer. Absorbing plates will be made of coated aluminum, which will be produced by Sun Stripe Inc in Sweden. In order to improve the heat transfer efficiency of the plates to the air, absorbing plates will be placed in the space between glass cover and air channels, and there will be two spaces for air passage over and below the plates. In order to enter and exit the air, gaps will be created at the bottom and top of the collector, with a length of 75 cm and a width of 5 cm. Collector was installed on the base with an angle of 45 degrees relative to the horizontal plane. Drying chamber with a height of 70 and a length and a width of 45 cm will be double glazed and

the external wall will be made of galvanized sheet and the internal wall will be formed of aluminum sheet. Between two walls will be filled with glass wool insulation with a thickness of 5 cm. door of drying chamber will be made of double glazed glass and completely sealed by rubber bands at the margins. Inside the dryer chamber is classified by 5 trays made of aluminum mesh that will move as sliders. The drying chamber is located on the base and at the top of the collector, and a connector made of galvanized sheet has connected the collector output to the input field at the bottom of the drying chamber, and the connector is also double glazed and insulated with glass wool. An air conditioner with a length of 45 cm and in the shape of a conic section is placed on the drying chamber, and there is a rotating fan with a diameter of 25 cm that is rotated by the wind flow and helps the air natural convection in the collector and the chamber[11].

Drying in solar dryers

During the study period, lemons were placed on 5 pieces of plastic mesh with dimensions of 15 by 15 centimeters and of a predetermined weight. Then, the lemons and the meshes were put in different classes of the solar dryer and thereby the moisture loss was investigated during drying period. To measure the air relative humidity of the dryer two wet and dry bulb thermometers were used at the top and bottom of the third floor and at intervals, temperature was read, and using psychrometric chart, the air relative humidity would be obtained (see Fig. 1)[14].

Drying in direct sunlight (the traditional method)

During the time of the research, lemons were placed on three pieces of plastic mesh with dimensions of 15 by 15 cm in direct sunlight, and the moisture loss was determined. In addition, to measure temperature, three thermocouples were installed in the ambient air and on the surfaces over and beneath the lemons and every 5 minute temperature data was recorded with a data collector device. Relative humidity of the air was determined by measuring the temperature of dry and wet air[14].

After completing the study, fruit shrinkage rate, fruit moisture loss and fruit color index were measured in the following ways.

Method of measuring the moisture loss during drying

In methods of drying using solar dryers and drying in the direct sunlight, samples were weighed with an accuracy of 0.01 gram and data was recorded at regular intervals (0.5, 1, and 3 hours and the rest every two hours) to achieve specific humidity (0.8 on dry weight basis) [14].

Product shrinkage measurement during the drying period

Changes in volume due to the product shrinkage will be determined by the water displacement. First, the lemon sample is weighed and then placed in a large picknometer and the picknometer is completely filled with water and after drying the walls of the picknometer, sample volume and the shrinkage are calculated using the following equation[15].

Weight of Water displaced = sample weight-[(water+ sample+ picknometer weight)] – (water + picknometer weight)]

Sample volume= Weight of Water displaced/water density

Shrinkage rate = $-(1-V/V)\times 100$

Where, V_1 is the volume at the desired time, V_0 is initial volume of the sample.

For a correct comparison between times 0 and t, V_t must be calculated for V_0 of the dried substance.

Measurement of color indices of the final product

At the end of the drying time, dried fruits were powdered and their color indices of L, A, B, H were measured by Hunter lab system (Data Color manufactured by Text Corporation of America).

After collecting the test observations, covariance analysis to examine the impact of common factor(s), variance analysis and Duncan mean comparison will be done using $SPSS_{V18}$ and treatment(s) of choice will be selected and introduced. Also, all diagrams, equations and linear regression graph will be plotted in Excel.

RESULTS

Synthetic curves of moisture loss in traditional and solar drying methods are shown in diagram (1). Curves show that depending on the time, drying in a solar drier is as much as 17 to 45 percent shorter than in the traditional drying method.

It is shown that, in the solar drying curves of lemon, there is a period of constant rate and there are two periods of descending rates. Also, due to

Table 1. Variance Analysis results of the effect of drying method on product shrinkage at a level confidence of 1 percent

Source of change	Degree of freedom	Squared means	F
Drying method	1	8.8	0.9
Error	94	9.1	

Table 2. Mean-variance analysis of the effect of solar drying

Source of change	Air tempreture		ERROR		F
Feature	Degree of freedom	Squared means	Degree of freedom	Squared means	
L	1	14.6	4	0.5	29.3*
B	1	14.3	4	0.2	55.1*
A	1	14.6	4	0.6	22.1*
H	1	61.8	4	0.2	213.3*

Table 3. Mean-variance analysis of solar drying and traditional method effect on lemon color

Parametermethod	L	B	A
Solar drier	51.7 A	23.6 B	27.2 A
Traditional method	48.6 B	26.7 A	24.6 B

the fact that at the beginning of the drying process, drying air temperature and the ambient temperature are very different, the intensity of moisture loss in solar dryer is higher than that of the traditional drying method.

Examining the changes in the product shrinkage as a function of moisture, in two different solar drying methods showed that this is an ineffective factor on product shrinkage. In (Table 1), the results are also confirmed and the effect of drying method on sheets shrinkage is not significant at confidence level of 1%.

The results show that the drying method has a significant effect on the color indices of the

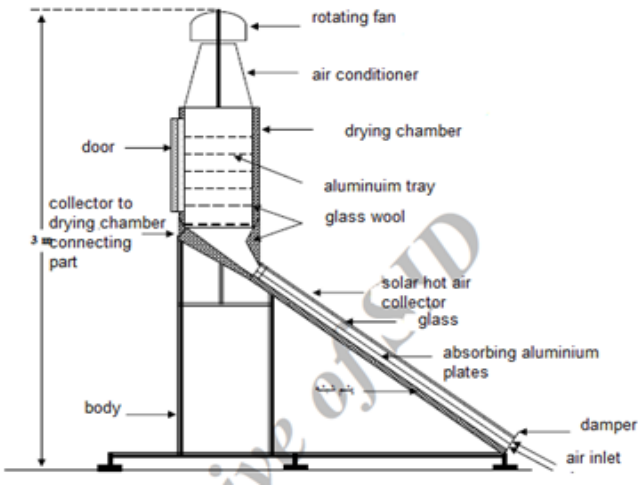

Fig. 1. Schematic cross section of a solar dryer

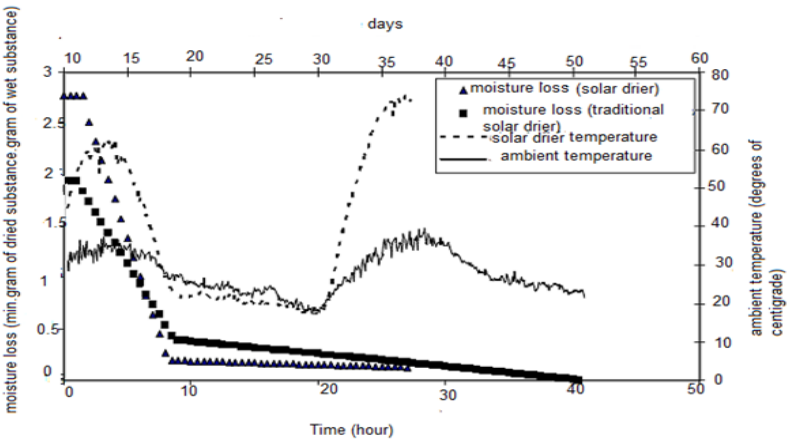

Diagram 1. The intensity of lemon moisture loss and temperature changes in the traditional drying method and solar dryer

final product at the 1% confidence level for both traditional and solar methods.

Results of Table (3) show that dried lemon in solar dryer have higher amounts of L, A than those of the traditional method. In other words, lemon dried by traditional method has more yellow color than that dried by the solar dryer.

DISCUSSION

Drying is the one of oldest method known by humans to preserve food. The method is based on food substance dehydration or the reduction of water activity that leads to the prevention of microbial, chemical, and biochemical putrescencty and increases the shelf life of the food substance. Drying food in the sun, though old, bus is still used as a practical approach in most countries, even developed countries, and that is due to the simplicity and the cheapness of the method[11].

In this study, the kinetics curves of moisture loss in two drying methods showed that depending on the time, drying in a solar dryer is shorter as much as 17 to 45 percent than that of the traditional drying. So the intensity of the moisture loss in solar dryer is higher than that of traditional drying method.

In the past, during the study of drying fruits by solar tunnel dryer and traditional drying method it was concluded that the drying rate of a solar drier is 26.9 percent more than that of the traditional method. In the studies, the drying curves also showed a descending rate period[13], which is consistent with the results of current research.

Zare *et al*. designing an active compilation solar dryer, and using it for drying husks, showed that the mass flow rate of air in the dryer and product discharge interval have a significant effect on the moisture content of the husk output[12]. Pangavan *et al*. designed a solar dryer with natural air flow, and used it for drying grapes. Their results showed that the drying rate with this method is significantly higher than that of the open sun drying or shade drying[11]. As in this study, depending on the time of the drying, the moisture loss rate is also higher. As at the lower temperature in a longer time, the highest moisture content decline was observed that is the consistent with research[16]. Also in studying the performance of solar dryers for drying lemons the results showed that the drying time reduced to half compared to the traditional method[17].

In the past it was stated that the use of solar driers compared with traditional drying in the sun causes more changes in sugar and vitamin C content of the fruit, since drying chamber temperature is higher in solar dryers[18]. And this is consistent with the results of this study, and as mentioned drying time in solar dryers is 17 to 45 percent less than that of traditional method. That is due to the higher temperature of the chamber.
We also observe that the average drying time is much shorter in solar driers than that in the sun drying method and this is the great advantage is that other studies have also confirmed[11, 19-21].

The investigations found that during drying in different months the moisture was reduced at different rates, so to obtain the temperature effect on shrinkage, moisture effect must be removed to determine the temperature effect on shrinkage. In the present study it is showed that at the same moisture content, temperature has no effect on shrinkage of lemon. In two different methods of drying it was determined that the two different drying methods (solar and traditional) have no effect on shrinkage.

Talla et al. obtained the same results in the drying process of bananas and showed that the effect of air temperature of the drier on bananas shrinkage is negligible[22]. In the past, by drying potato starch gel at different temperatures and measuring the shrinkage, it was concluded that temperature has little impact on the product shrinkage[23], which is consistent with current research.

In the study conducted by Sasilik *et al*. comparing the solar tunnel dryer with a traditional dryer it was found that dried tomatoes in a tunnel dryer have more red and brighter colors than those dried by the traditional method[13]. Therefore, it should be noted that the purpose of their study was the problem that in the solar drier the fruit color would be maintained to a greater degree and in the traditional drying method the fruit color would be changed to a greater degree that is consistent with the results of the current research.

As in the current study, the yellow color percentage is much higher in the solar drier than that of the traditional method. It is certain that the color of the fruit is important in marketability.

Chen *et al.,* (2005), used a Rob solar dryer for drying slices of lemon and compared the product with the samples dried by a cabinet drier with a stream of hot air at 60 ° C and concluded that the in terms of sensory qualities such as color, the product obtained in a solar dryer was in a better condition[24], which is consistent with current research. It was also stated that in the sun and solar drying methods fruits tend to have more red color and that is has been attributed to the influence of the flowing air temperature and also the solar radiation[25]. In the present study the solar drying methods tend to have more red color.

In a recent study of drying saffron in a solar oven in the temperature range of 40-50 degrees C and a duration of 2.5 and 5.5 h, at controlled and traditional condition it was stated that oven samples had more favorable features of color and texture than those of traditional samples and solar samples were very satisfactory in terms of aroma and texture in compared with traditional samples[26]. In the present study greater transparency was observed in the solar system followed by the traditional method. Kakhki has also pointed to the dark color of the fruits in the traditional methods in his study[27].

CONCLUSIONS

By drying lemons in a solar dryer system and in the traditional sun drying methods it was concluded that the rate of drying is higher in solar drier than in traditional method. And in moisture loss intensity curves in solar drying methods, there was a fixed rate period and there were two descending rate periods. Studying shrinkage changes during drying at different air temperatures also showed that the effect of dry air temperature on the product shrinkage was not significant and the shrinkage was just a function of moisture content and drying methods also did not affect. On the fruit color is also found that the use of solar methods kept the color better and brighter. The use of solar dryers instead of using traditional methods to preserve the quality and quantity of fruit is recommended.

REFERENCES

1. Campelo, L. M. L., De Almeida, A. A. C., De Freitas, R. L. M., Cerqueira, G. S., De Sousa, G. F., Saldanha, G. B., Feitosa, C. M. & De Freitas, R. M., Antioxidant and Antinociceptive Effects of Citrus limon Essential Oil in Mice. *Journal of Biomedicine and Biotechnology*, 2011; 1-8.
2. Nameless. Statistics of Iran farm. Bureau of Agricultural Statistics, Tehran: Publication No. 01/79, 1379.
3. Eversheh A. 100 plants used in 1000 book, translated by Marziyeh Azad, First Edition, 1369, published by Nahid, P. 247- 249.
4. Owhe-Ureghe, U. B., Ehwarieme, D. A. and Eboh, D. O., Antibacterial activity of garlic and lime on isolates of extracted carious teeth. *African Journal of Biotechnology* 2010; **9**(21): 3163-3166.
5. Oyagade, J. O., Awotoye, O. O., Adewunmi, J. T. and Thorpe, H. T., Antimicrobial Activity of

some Nigerian medicinal plants. I. Screening for Antibacterial Activity. *Bioscience Research Communications* 1999; **11**(3): 193-197.

6. Aibinu, I., Adenipekun, T., Adelowotan, T., Ogunsanya, T. and Odugbemi, T., Evaluation of the antimicrobial properties of different parts of Citrus aurantifolia (lime fruit) as used locally. *African Journal of Biotechnology* 2007; **4**(2): 185-195.
7. Faraji Harmi R. Principles of Food Preservation. Shiraz University Press. 1371.
8. Maleki M, Dokhani Sh. Food industry. Volume I, Third Edition, Shiraz University Press. 1374.
9. Fellows, P. Food Processing Technology. Principles and Practice, Ellis Horwood, New York, 1990.
10. Soheili Mehdizadeh A, Keyhani A. Forced convection solar dryer designed for leaf vegetables and evaluate the performance of solar collectors. Agricultural Engineering Research, 1385; **7**(27): 147- 163.
11. Pangavhane, D. R and P. N. Sawhney., Review of research and development work on solar dryer for grape drying. Energy Conversion and Management, 2002; **43**: 45-61.
12. Zare DA, Ghasem Khani V H. Effect of air mass flow rate and time of discharge of the product on rough reduce moisture in a semi-continuous Solar Dryer. *Science and Technology of Agriculture and Natural Resources*, 1384; **9** (1): 264 251-.
13. Sacilik, K. and A. K. Elicin., The thin layer drying characteristics of organic apple slices. *J. Food Eng*. 2005; **12**: 101-115.
14. Akbari, A, Shahedi M, Hamdami N et al. Kinetics of moisture loss and comparison of tomato slices during drying, using solar drying and traditional sunny and dry air. *Agricultural Science and Technology,* 1388; **13**(47): 445-460.
15. Sjoholm, I. and V. Gekas., Apple shrinkage upon drying. *J. Food Eng*. 1995; **25**: 123-130.
16. Rangahau, M.K., Growing saffron- the world's most expen sive spiee. Crop and Food Research. New Zealand nistitute for crop and Food Research Ltd. Acrown Reasearch Inistite 2003; **20**: 8:20.
17. Mohammad Pour A, Mirzaei M A, Ghaffari M M. Performance of solar dryers for drying of lemon. *Journal of Mechanical Engineering,* 1392; **14**(43): 1-10.
18. Krokida, M., C. Kiranoudis and Z. Maroulis. Viscoelastic behavior of dehydrate products during dehydration. *J. Food Engineering*, 1999; **40**: 269-277.
19. Gallali, Y. M., Y. S. Abujnah and F. K. Bahnani. Preservation of fruit and vegetable using solar dryer. *Renewable Energy*, 2000; **19**: 203-212.
20. Bala, M., M. Mondol, B. Biswas, B. Chovdury and S. Janjal., Solar drying of pineapple using solar tunnel dryer. *Renewable Energy*, 2003; **28**: 183-190.
21. Supranto, S. K., W. Daud, M. Othman and B. Yatin., Design of an experimental solar assisted dryer for palm oil fronds. *Renewable Energy,* 1999; **16**: 643-646.
22. Talla, A., J. R. Puiggali, W. Jomaa and Y. Jannot. Shrinkage and density evolution during drying of tropical fruits : application to banana. *J. Food Eng*. 2004; **64**: 103-109.
23. Al-Muhtaseb, A. H., W. A. M. McMinn and T. R. A. Magee., Shrinkage, density and porosity variations during the convective drying of potato starch gel. Proceedings of the 14th International Drying symposium, Sao Paulo, Brazil, 2004; 1604-1611.
24. Chen, H., C. E. Hernandez and T. Huang., A study of drying effect on lemon slices a closed-type solar dryer. *Solar Energy*, 2005; **78**: 97-103.
25. Mesbahi Gh R, Zomorodian A, Dadash Zadeh M, Farahnaki A. Studying comparison of raisins by drying and other drying methods. *Journal of Food Science and Technology, Iran,* 1385; **2**(2) Second half: 61-74.
26. Taslimi A, Mazloumi M T, Jamshidi A. Comparison of solar and vacuum drying processes with traditional methods of feature saffron. *Journal of Food Science and Technology,* 1385; **3**(3): 9-17.
27. Hemmati Kakhki A., Studying effects of dry saffron quality. Scientific and Industrial Research Organization of Iran, Khorasan Research Institute, 1370; 5-39.