BIOSCIENCES BIOTECHNOLOGY RESEARCH ASIA, December 2014. Vol. **11**(3), 1725-1729

The Model of Compound Rod in Designing of Adhesive Andadhesive-Mechanical Joints

Mikhail Ivanovich Semin, Maria Yurievna Karelina, Natalya Vladimirovna Atamanenko and Tatyana Yurievna Tcherepnina

125319, MADI, Leningradskiy prospect, building 64, Moscow, Russia,
The Moscow State Automobile and Road Technical University (MADI)

doi: http://dx.doi.org/10.13005/bbra/1576

(Received: 30 October 2014; accepted: 05 December 2014)

The capabilities of calculation methods for the design of adhesive and adhesive-mechanical joints are regarded, based on the model of the compound rod. Recommendations on estimation of the impact of number of structural factors and parameters on the load of the connecting node of layered construction.

Key words: Compound rod, Adhesive-mechanical joint, Load of connecting node, Connecting node of layered construction.

For the rational design of compounds it is necessary to have three main complexes of calculation methods to determine the load of the compound elements:

a) general methods of compounds' calculating, based on the developed mathematical models to identify the determinant geometrical parameters and effort in power points, seams, adhesive interlayer, etc.;
b) a set of ways to assess the impact on the joints'carrying capacity under static and cyclic load of the technological factors;
c) methods of analysis of local strength on theweakened cross sections and forecasting of defects' development in the area of stress concentrators.

In design calculations ofdifferent types of joints implemented in practice,complexes of calculation methods (except the first one), whichare listed above are practically unused. Compounds'design is generally implemented by nominal shear or crushing stresses of fastener elements. The values of allowable stresses are taken on the basis of past operating experience of similar products in the relevant branches of machine industry (Belous and Khvatan, 1979).

Thus, in a typical calculation method of the strength of the adhesive joints, made of duralumin alloys (OS 92-0009-67) the strength of adhesive joint with shear$t_a$and uniform separation $s_a$is calculated by the formulas:

$$\tau_a = F_b/A;\ s_a = F_b/A \qquad ...(1)$$

where

F_b – breaking load and A – adhesive area.

The strength of the adhesive joint with ununiformedbreak is determined by the test of patterns, which are firmly fixed plates, glued together with thin metal strips, separated from the base in a direction, perpendicular to the plane of gluing:

$$q_a = F_b/b \qquad ...(2)$$

* To whom all correspondence should be addressed.

where b – glued layerwidth, q – breaking force per width unit. For flexible glued elements the strength within the separation of one from the other isdetermined.

The check of the strength of adhesive joints of metalsis produced according to the following relations:

inshear – $(\tau_a/\tau)\ (\sigma_y/\sigma_s) \geq [n]$;

in uniform separation– $(\sigma_a/\sigma)\ (\sigma_y/\sigma_s) \geq [n]$;

in ununiformed separation– $(q_a/q)\ (s_y/s_s) \geq [n]$.

wheret, σ, q – averaged operating stresses and efforts per joint width unit; σ_t, σ_s– yield strength and the strength of the connected parts respectively; [n] – allowable strength factor, accepted for the main structure.

In the case of cyclic loading of adhesive joints of metal structural elements it is considered, as a rule, that the limit of their fatigue is about 10% of the static strength. If adhesive joint is exposed to corrosive environment, the value of the fatigue limit is reduced to a greater extent (two-component adhesives for the cold curing –up to 50%).

Low-cycle fatigue limit of metal adhesive joints is taken about 30% of the static strength limit. Regulatory strength factor should be selected 2at least.

This (traditional) method of determining the geometric parameters of adhesive joints, used with some additional restrictions, is based on experience in metallic structural components using high-strength hot curing adhesives, which confirms that the service life of these joints is from 5 to 10 years.

Recently, as a basis for modeling of the joints' mechanics finite element methodiswidely used (Galager, 1984; Semin, 1989; Pizzi and Mittal, 2003; Composite materials handbook, 2002). The algorithm of the method allows conducting the study of constructions within the most general boundary conditions and external loads, it has sufficient flexibility and high precision, allows us to analyze the constructions of complex configurations, characterized by great flexibility in presenting complex areas and boundary conditions.In this case, the real picture or process can be described in more complex functions than taken as a basis in finite elements, gradients of the studied values may be in conflict with the separation accuracy, implemented in practice, modeling of the boundary area by the set of points in contact tasks is not always justified, representation oftime processes is integrated with unjustified labor intensity.

Therefore, for the purposes of development of practical recommendations for the design of jointsdo not lose their actuality of mathematical models and calculations of adhesive adhesive-mechanical joints, based on the study of the mechanics of multi-layer compound rod (Sparrow and Sirotkin, 1985; Sazhin, 1964; Semin, 1982; Semin and Skoriy, 1976). It is assumed that the stresses and deformations of layers are defined by the materials' resistance formulas, and connecting elements (adhesive layer, rivets, welding, ..) transfer the load from one layer to another and work primarily in shear and break.

In the calculations of themetaladhesive joints, within determining of the shear modulus, elastic modulus and Poisson's ratio G, E, madhesive layer it must be taken into account that it is structurally anisotropic. In this case, the adhesive layer is glued between two rigid elements, and on the boundary "adhesive-metal" adhesive forcesunder load of the joint restrict deformation of adhesive material. These limitations have significantly greater influence on longitudinal deformation than angular. Therefore, the longitudinal elastic modulus of the adhesive layer increases considerably (2... 2.5times) than the shear modulus (40…60%), compared with the corresponding values of the elastic characteristics of the cured from adhesive casting of polymer bonding agent.

Restriction of deformation of the polymer bonding agent affects the Poisson's ratio m as well. Poisson's coefficient value of the adhesive layer is reduced as compared with the value of the cured adhesive castingm$_a$. Furthermore, m coefficient depends on the kind and deformation of the joint. On the thickness of the adhesive layer mcoefficient changes from Poisson's coefficient value of theglued material at the boundary "adhesive-metal" to a certain value in the center of the adhesive layer, which depends on the type of deformation, but does not exceed the coefficient of the cured adhesive casting.

As an example of one of the tested complexes of calculation methods let us consider the calculations of adhesive joints and adhesive-mechanical joints taking into the consideration the

bevel edges, nonlinear elastic characteristics of the binder and the dynamic nature of loading (Vorobey and Sirotkin, 1985; Sazhin, 1964; Semin, 1982; Semin and Skoriy, 1976; Seminand Turchinsky, 1985), allowing to conduct both a general analysis of the workload of the connecting node, depending on the design parameters and evaluate the nature of the stress' concentration in the area of mechanical fasteners, to forecast the durability.

When taking into account the bevel edge, the stress-deformed state of the jointis described by a system of ordinary differential equations with variable coefficients (Semin and Skoriy, 1976). Typical diagrams of normal and shear stresses along the gluing, reduced to dimensionless form, shown in Figure 1. The solution has been conducted by thenumerical method of orthogonal sweep.

a) 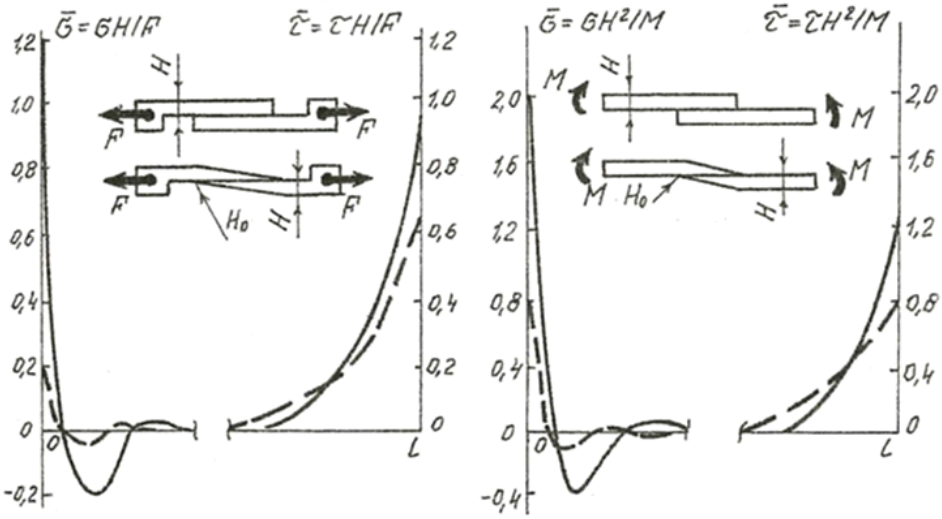
 b)

Fig. 1. Stresses' distribution in the joints of the "simple overlapping" (-) and "overlapping with beveled edges" (- -) under tension (a) and bending (b): $E_1 = {}_2 = 7 \times 10^4$ MPa; $\| = 3 \times 10^3$ MPa; d = 0.2 mm; l = 50 mm; $H_0/H = 0.1$, where H_0–minimal plate width at the joint end

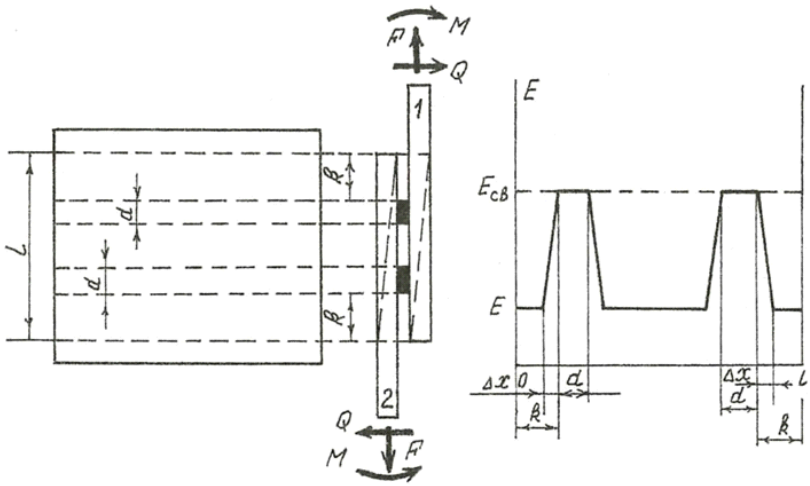

Fig. 2. Design model of the combined adhesive-welding joint of the "simple overlapping"and "overlappingwithbeveledges" (- -).

The line of action of the tensile load lies along the joint axis, i.e. it is not required totake into account the distortion of the configuration under the load of the joint. At the edges of the calculated adhesive node parts (apart from the tensile force F) the bending torque takes place M = FH/2, where H – the thickness of the joined sheets. Two weld seamsof2 mm wide, performing the role of mechanical fasteners are placed at the same distance k from the edges of the joint (Figure 2) (Ionov and Kutyinov 1979, Cagle, 1971; Kutyinov, 1979; Pescherova and Kozlov, 2007).

The hypothesis isaccepted, according to which the change of stiffness of the connecting layer at the places of the transition from the adhesive and mechanical fasteners and back is linear in a sufficiently small interval DE= 5 mm with the lengths of the adhesive-mechanical jointl = 50 mm. Modulus of elasticity of the adhesive layer is assumed to be E = 3 x 10^3 MPa. The performed calculations are conductedfor practically used thicknesses of the adhesive layer ofd =0.2 mm.in the design. The modulus of elasticity of the material of mechanical fasteners is accepted as E_b = 7 x 10^4 MPa. Joined sheets are considered as made of the same material with an elastic modulus $E_1 = E_2$ = 7 x 10^4MPa.

When the location of the welding seams is at the very edges of the joint (k=0), a sharp increase of stresses concentration,compared with purely adhesive joint, which falls within the material of the welded seam. The adhesive layer is located between two welding seams is practically not loaded, providing a monolithic work of the compound construction.

Location of welding seams at a small distance from the edges of the joint of the "simple overlap"type (k= 2.5 mm) leads to a greater load of the part of the polymer adhesive layer at the edges of the joint than in purely adhesive joint. At the same time on the tangent (shear) stresses such an arrangement of the welding seams has practically no effect, while the normal (break) stresses s in the adhesive are increased significantly (Fig. 3). In joint with the beveled edges ("$_0$ = 0.1 H, where H_0– minimum sheet thickness at the junction area) within this location of the welding seams, the adhesive layer part, located at the edges of the joint is actually loaded in the same manner as in purely adhesive joint.In both cases, the weld material works in shear. In the second case the welding seamsare loaded by the break stresses significantly less (Designing, calculation and testing of composite materials' constructions, 1975).

Within further displacement of the welding seams to the middle of the joint (k e" 5 mm) the load,falling within them is significantly reduced: the effort transfer from one of the joined sheets to another is carried out by a polymer adhesive layer at the edges of the joint. The polymer adhesive layer is loaded with almost the same extent as in a pure adhesive joint, wherein the adhesive layer in the middle of the node is not loaded. In such joints welding seams act as preventing mechanical reinforcements.

The main efficacy of theuse of adhesive-mechanical joints in comparison with the use of other types of joints is achieved by the fact that the combined joints the basic part of the load is taken by the glue. As a result, the peaks of the stresses' concentration in theglued parts "smeared out", that considerably increases the carrying capacity of the joints. Elements of the mechanical fasteners (bolts, rivets, welding seams) are used to improve the reliability of the connections, experiencing irregular (mostly break) loads. From this point of view, the use of adhesive-mechanical joints with beveled edges is more appropriate than the combined joints of"simple pad"type because

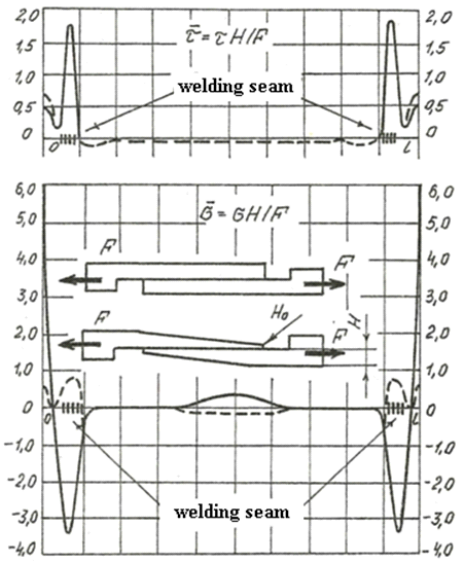

Fig. 3. Distribution of tangential normal stresses in the binding agent along the combined adhesive-welding joint (- -- for the joint with the beveled edges)

the mechanical fasteners work more efficiently at the force transfer, and the adhesive layer experiences less break stresses. If mechanical fasteners are in the area of the transmission of forces, determined for the same purely adhesive joint, a significant increase in stress in the polymer adhesive bonding agent at the ends of the joint is absent and the loadof the elements of the mechanical fasteners is increased(Khvatan, 1979; Tsarahov, 1980; Shvechkovand others, 1985).

The considered model of the joining of two sheets of pliable elastic layer is acceptable to analyze the strength of the joints, made on the basis of rigid high-strength structural adhesives. It can also be used to estimate the behavior of the adhesive structures with significant nonlinearity of deformation of the adhesive layers. In these cases, the smaller values of the elastic modules of the adhesive layers should be programmed in thecalculations.

CONCLUSION

When designing the adhesive joint it is necessary to considerthe following factors:

1. The stress distribution in a two-layer compound structure depends on the boundary conditions and parameters D_1=EH/E1d=EH/E2d=H_0/H.
2. Bevel of the edges of the sheets due to the increase ofsuppleness by 60-70% reduces the stress of the break in the adhesive and has little effect on the shear stresses.
3. The parameters that characterize the mechanics of the transmission of the forces from one part to another. Within their small value of the transmission of the forces takes place throughout the joint (parameters close to 0.15). Increasing the parameters reduces the efforts'transmission zone and increases the concentration of stresses.

REFERENCES

1. Belous, A.A. and A.M., Khvatan, 1979. Calculation of the adhesive-mechanical over lapped joints. Design, calculation and test of the constructions made of composite materials. Technical guides. "oscow: CIA, Issue VII,pp: 49-55.
2. Galager, O, The method of the finite elements. Basic principles. Moscow: World, 1984; 428.
3. Vorobey,V.V. and O.S. Sirotkin, 1985. The joints of the construction elements of the composite materials. Leningrad: Machine industry, pp: 168.
4. Ionov,.. andV.F. Kutyunov,1979. The calculation of the joints in the combined construction swith in the processing of the "miter joint" mending plates' flat end. Design, calculation and test of the constructions made of composite materials. Technical guides. "oscow: CIA,Issue VII,pp: 31-41.
5. Kagle,Ch., Adhesive joints. Under the edition of D.. Kardashov. Moscow: World, 1971; 295.
6. Kutyiniv,V.F., Adhesivejoints' calculation. Design, calculation and technical materials. Moscow: CIA, 1979; **8**: 14-31.
7. Pesherova,".N. andG .Kozlov, The influence of the construction peculiarities and technological parameters of the adhesive joints' forming on their strength. *Technology of the machine industry*, 2007; **4**(58): 29-32.
8. Design, calculation and test of the constructions made of composite materials. Technical guides, Moscow: CIA, 1975; **4**: 81-111.
9. Sagin, A.M., The calculation of the stresses in the adhesive joints of the metal plates in shear. Machine industry reporter, 1964; **11**: 43-46.
10. Semin,".I., Adhesivejointsdesign. "oscow: Machineindustry, 1982; 28.
11. Semin,".I., Bolt and rivet joints of the composite materials."oscow: Machine industry, 1989; 44.
12. Semin,".I. and I.. Skoriy, About the influence of the construction parameters on the stressed status in the adhesive joints.Strength issues, 1976; **4**: 56-60.
13. Semin,".I. and L..Turchinskiy, Themethodology of the calculation of the durability of the adhesive joints within dynamic load. Strength issues, 1985; **9**: 92-97.
14. Khvatan, A.M., The calculation of the adhesive joint taking onto account the plasticity of the adhesive. Scholarly notesICA, 1979; **4**(X): 140-143.
15. Tsarahov,Yu.S., Design of the joints of composite materials. "oscow: RSTU, pp: 82.
16. Shvechkov,.I.,.B. Kudryashov and A.M. Khvatan,1985. The analysis of the stressed-deformed status of the adhesive joint.Strength issues, 1980; **9**: 88-92.
17. Pizzi, A. and K.L.Mittal, Handbook of Adhesive Technology. Second edition, revised and expanded. Marcel Dekker Inc., 2003; 999.
18. Composite materials handbook: Polymer matrix composite materials usage, design and analysis, 2002; 3. Department of defense handbook, pp: 693.